# NOZZLE PATTERN - TRIPE WASH ASSEMBLY - MODEL TW-1000 - 7'-2" CABINET

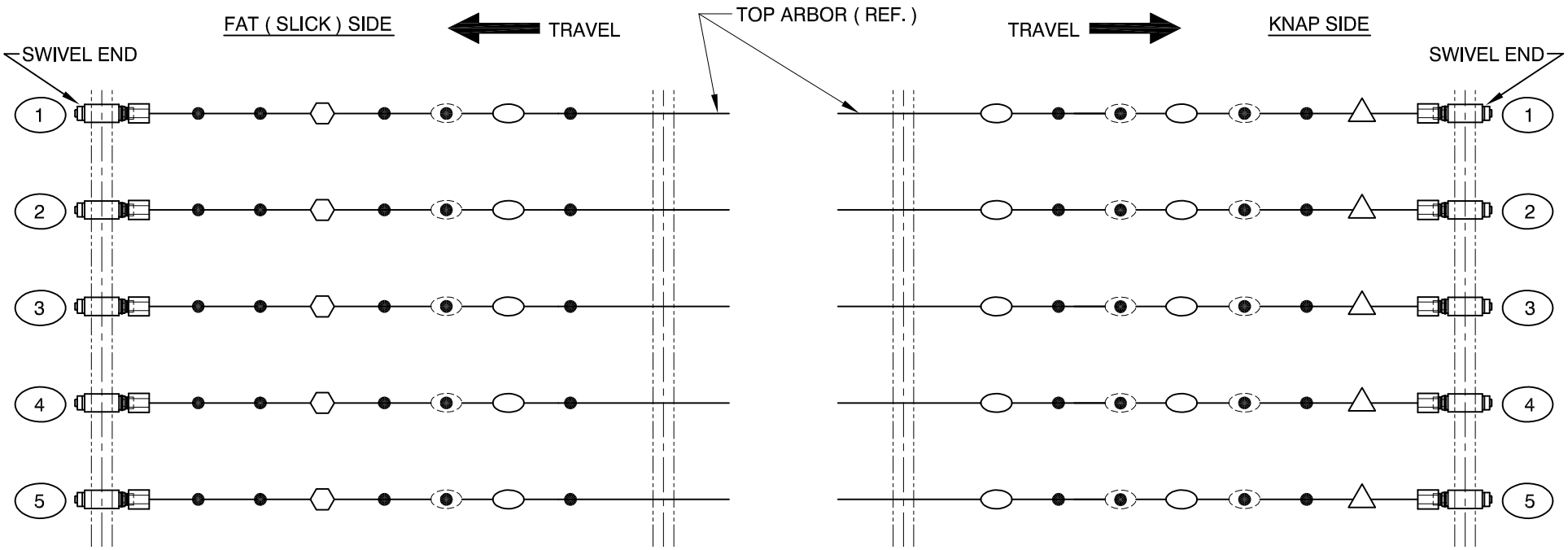


NOTE: DASH LINE INDICATES: "ADD AS REQ'D"

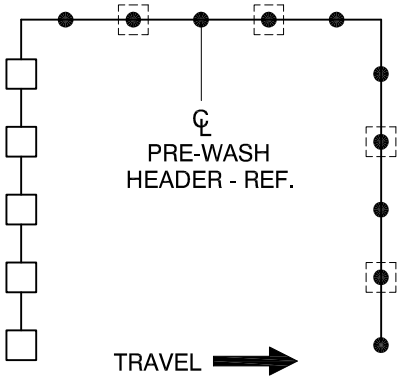


PRE-WASH (KNAP SIDE ONLY)

NOZZLE LEGEND

- ● DESIGNATES - 1/8" NPT S/S PLUG
- ⬭ DESIGNATES - STD ( 4 ) HOLE BAR NOZZLE
- ⬡ DESIGNATES - H1/8USS2520 FAN NOZZLE
- △ DESIGNATES - H1/8USS2530 FAN NOZZLE
- □ DESIGNATES - 1/8MEG4010 FAN NOZZLE


CHAD COMPANY
19950 WEST 161st STREET
OLATHE, KS 66062
http://www.chadcompany.com
(913) 764-0321 (800) 444-8360


DWG #: TW-1000-04